Hi-Force HYDRAULIC TOOLS

HWRC- DOUBLE ACTING WIRE ROPE CUTTERS.

SERIAL NUMBERS
ALL.

SPARE PARTS LIST NO.
HWRCP1

03/05/12

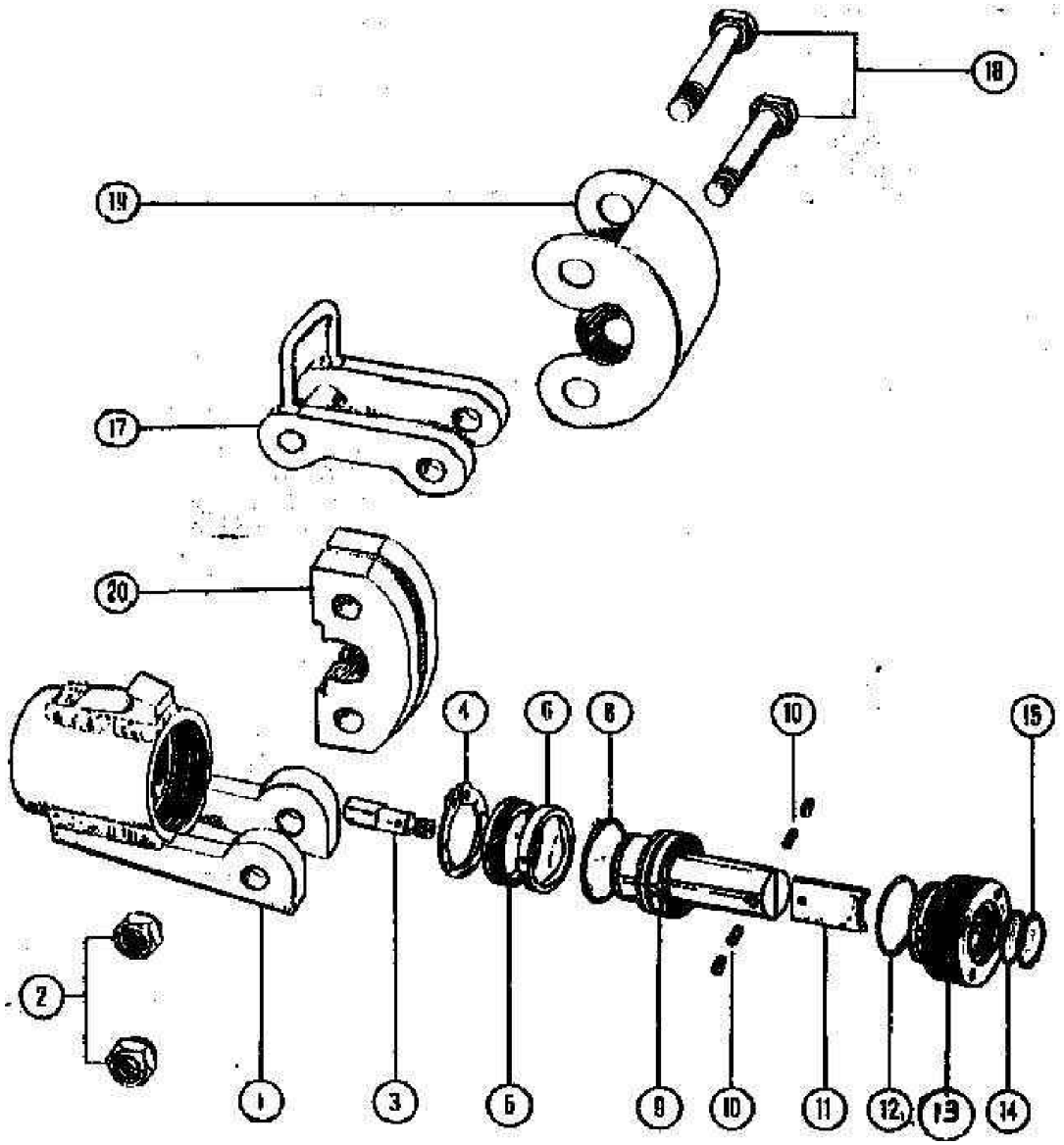

ITEM/ PART NO	HWRC1115	HWRC1125	HWRC1136	HWRC1145	DESCRIPTION
1	111501	112501	113601	114501	MAIN BODY
2	111502	112502	113602	114502	PIVOT PIN NUT
3	111503	112503	113603	114503	RELIEF VALVE
4	X	X	X	X	RETAINING SPRING
5	X	X	X	X	PISTON SEAL
6	X	X	X	X	BACK UP RING
8	X	X	X	X	O' RING
9	111509	112509	113609	114509	PISTON
10	111510	112510	113610	114510	BLADE HOLDING STUDS
11	111511	112511	113611	114511	BLADE
12	X	X	X	X	O' RING
13	111513	112513	113613	114513	COLLAR
14	X	X	X	X	O' RING
15	X	X	X	X	O' RING
17	111517	112517	113617	114517	LOCKING LATCH
18	111518	112518	113618	114518	PIVOT PINS
19	111519	112519	113619	114519	GUARD
20	111520	112520	113620	114520	JAW ASSEMBLY

NOTE: PARTS MARKED 'X' SUPPLIED IN REPAIR KIT AS BELOW ONLY:

HWRC1115 KIT: HWRC1115TP1-K
HWRC1125 KIT: HWRC1125TP1-K
HWRC1136 KIT: HWRC1136TP1-K
HWRC1145 KIT: HWRC1145TP1-K

IMPORTANT

WHEN ORDERING SPARES YOU MUST STATE THE FULL PART NUMBER AND THE PRODUCT SERIAL NUMBER - FROM THE LABEL
TO PROTECT YOUR WARRANTY ALWAYS USE GENUINE HI-FORCE PARTS.