K 81109 TNCylindrical roller and cage thrust assembly



Cylindrical roller and cage thrust assembly

Cylindrical roller and cage thrust assemblies are designed to accommodate heavy axial loads and peak loads in one direction, but not radial loads. Thrust assemblies can be used in applications where the adjacent components serve as raceways and enable bearing arrangements with a low axial section heights. Where the adjacent components cannot serve as raceways, they can be combined with one or two bearing washers to create complete bearings.

- High axial load carrying capacity
- High stiffness
- Long service life
- Require little axial space
- Can be combined with bearing washers

Overview

Dimensions

Bore diameter	45 mm
Outside diameter	65 mm
Height	6 mm

Performance

Basic dynamic load rating	45 kN
Basic static load rating	153 kN
Reference speed	2 200 r/min
Limiting speed	4 500 r/min

Properties

Bearing part	Roller and cage assembly
Axial load capability	Single-direction
Number of rows	1
Cage	Non-metallic
Tolerance class	Normal
Material, bearing	Bearing steel
Coating	Without

Technical Specification

NOT FOUND

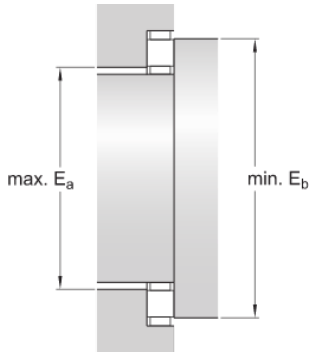

Dimensions

d	45 mm	Bore diameter
D	65 mm	Outside diameter
D_w	6 mm	Diameter roller
E_a	47 mm	Raceway diameter (min.) roller and cage thrust assembly
E_b	63 mm	Raceway diameter (max.) roller and cage thrust assembly

Calculation data

Basic dynamic load rating	C	45 kN
Basic static load rating	C_0	153 kN
Fatigue load limit	P_u	15.3 kN
Reference speed		2 200 r/min
Limiting speed		4 500 r/min
Minimum axial load factor	A	0.00187

Mass

Mass roller and cage thrust assembly	0.035 kg

Associated products

Shaft washer	WS 81109
Housing washer	GS 81109
Universal washer	LS 4565

Terms and conditions

By accessing and using this website / app owned and published by AB SKF (publ.) (556007-3495 · Gothenburg) (“SKF”), you agree to the following terms and conditions:

Warranty Disclaimer and Limitation of Liability

Although every care has been taken to assure the accuracy of the information on this website / app, SKF provides this information "AS IS" and DISCLAIMS ALL WARRANTIES, EXPRESS OR IMPLIED, INCLUDING, BUT NOT LIMITED TO, IMPLIED WARRANTIES OF MERCHANTABILITY AND FITNESS FOR A PARTICULAR PURPOSE. You acknowledge that your use of this website / app is at your sole risk, that you assume full responsibility for all costs associated with use of this website / app, and that SKF shall not be liable for any direct, incidental, consequential, or indirect damages of any kind arising out of your access to, or use of the information or software made available on this website / app. Any warranties and representations in this website / app for SKF products or services that you purchase or use will be subject to the agreed upon terms and conditions in the contract for such product or service. Further, for non-SKF websites / apps that are referenced in our website / app or where a hyperlink appears, SKF makes no warranties concerning the accuracy or reliability of the information in these websites / apps and assumes no responsibility for material created or published by third parties contained therein. In addition, SKF does not warrant that this website / app or these other linked websites / apps are free from viruses or other harmful elements.

Third Party Services

When viewing YouTube content via the SKF website(s) (i.e. using YouTube API Services), you agree to be bound by the YouTube Terms of Service.

Copyright

Copyright in this website / app copyright of the information and software made available on this website / app rest with SKF or its licensors. All rights are reserved. All licensed material will reference the licensor that has granted SKF the right to use the material. The information and software made available on this website / app may not be reproduced, duplicated, copied, transferred, distributed, stored, modified, downloaded or otherwise exploited for any commercial use without the prior written approval of SKF. However, it may be reproduced, stored and downloaded for use by individuals without prior written approval of SKF. Under no circumstances may this information or software be supplied to third parties.
This website /app includes certain images used under license from Shutterstock, Inc.

Trademarks and Patents

All trademarks, brand names, and corporate logos displayed on the website / app are the property of SKF or its licensors, and may not be used in any way without prior written approval by SKF. All licensed trademarks published on this website / app reference the licensor that has granted SKF the right to use the trademark. Access to this website / app does not grant to the user any license under any patents owned by or licensed to SKF.

Changes

SKF reserves the right to make changes or additions to this website / app at any time.